Work Order ID 71012

Tuesday, June 21, 2011 8:21:04 AM

Item ID: D4055-041
Revision ID:
Item Name: Fuel Tank Assembly
Start Date: 6/21/2011 **Start Qty:** ~~1000~~ 1
Required Date: 6/23/2011 **Req'd Qty:** ~~1000~~ 1
Reference:

Accept

Setup Start
Stop

Cust Item ID:
Customer:

Run Start
Stop

Approvals: **Process Plan:** M **Date:** 11-06-21 **Tooling:** _____ **Date:** _____
QC: _____ **Date:** _____ **SPC (Y/N):** _____ **Date:** _____

Sequence ID/ Work Center ID	Operation Description	Set Up/ Run Hours	Tool ID	Tool #	Plan Code	Accept Qty	Reject Qty	Reject Number	Insp. Stamp

Draw Nbr	Revision Nbr
D4055	B

100 Weld per dwg A/R Aluminum rod Batch: 114703 117884 0.00

Large Fab

Large Fab

Memo 0.00

M 11-06-30 1 ϕ

1- weld D4023-3 cap, D3999-11 earth tab and D4008-11 hinge onto D4055-11 as per dwg D4055

2- Weld D4001-1 and D4000-5 onto D4055-1 Top

2- Weld D4055-9 and D4055-11 together

2- weld D3999-041/-043 doubler followed by D3999-9 inside tank, ensure doubler and angle holes line-up for D4000-047

3- Weld D4000-043 and D4000-045 on tank as per dwg.

4- Instal D4000-9 grommets as per dwg, Weld D4055-3 aft end as per dwg, locate D4000-1 fitting using locating jig DTXXXX and weld as per dwg

5-Weld D4055-7 fwd end

Dart Aerospace Ltd

W/O:		WORK ORDER CHANGES					
DATE	STEP	PROCEDURE CHANGE	By	Date	Qty	Approval Chief Eng / Prod Mgr	Approval QC Inspector

Part No: _____ **PAR #:** _____ **Fault Category:** _____ **NCR:** Yes No **DQA:** _____ **Date:** _____

Resolution: _____ **Disposition:** _____ **QA: N/C Closed:** _____ **Date:** _____

NCR:		WORK ORDER NON-CONFORMANCE (NCR)						
DATE	STEP	Description of NC Section A	Corrective Action Section B			Verification Section C	Approval Chief Eng	Approval QC Inspector
			Initial Chief Eng	Action Description Chief Eng	Sign & Date			

NOTE: Date & initial all entries

SHIP THURS MORNING

Work Order ID 71012

Tuesday, June 21, 2011 8:21:05 AM

Item ID: D4055-041 **Accept** **Setup Start**

Revision ID:

Item Name: Fuel Tank Assembly **Stop**

Start Date: 6/21/2011 **Start Qty:** 1.00 **Cust Item ID:**

Required Date: 6/23/2011 **Req'd Qty:** 1.00 **Customer:**

Reference:

Approvals: **Process Plan:** _____ **Date:** _____ **Tooling:** _____ **Date:** _____ **Run Start**

QC: _____ **Date:** _____ **SPC (Y/N):** _____ **Date:** _____ **Stop**

Sequence ID/ Work Center ID	Operation Description	Set Up/ Run Hours	Tool ID	Tool #	Plan Code	Accept Qty	Reject Qty	Reject Number	Insp. Stamp
110	QC9- Inspect visual per QSI004- Fusion Welds	0.00				1	Ø	BE11/06/30	
QC	Memo	0.00							
Quality Control									
121	Weld per dwg A/R Aluminum rod Batch: M114703	0.00				1	Ø		
Large Fab	Memo	0.00							
Large Fab	1-Weld top D4055-1		11·07·04						
122	QC9- Inspect visual per QSI004- Fusion Welds	0.00				1	Ø	BE11/07/05	
QC	Memo	0.00							
Quality Control									

Dart Aerospace Ltd

W/O:		WORK ORDER CHANGES					
DATE	STEP	PROCEDURE CHANGE	By	Date	Qty	Approval Chief Eng / Prod Mgr	Approval QC Inspector

Part No: _____ **PAR #:** _____ **Fault Category:** _____ **NCR:** Yes No **DQA:** _____ **Date:** _____

Resolution: _____ **Disposition:** _____ **QA: N/C Closed:** _____ **Date:** _____

NCR:		WORK ORDER NON-CONFORMANCE (NCR)						
DATE	STEP	Description of NC Section A	Corrective Action Section B			Verification Section C	Approval Chief Eng	Approval QC Inspector
			Initial Chief Eng	Action Description Chief Eng	Sign & Date			

NOTE: Date & initial all entries

Ship Thurs. July 7 !

Work Order ID 71012

Tuesday, June 21, 2011 8:21:05 AM

Item ID: D4055-041 **Accept** **Setup Start**

Revision ID: **Stop**

Item Name: Fuel Tank Assembly

Start Date: 6/21/2011 **Start Qty:** 1.00 **Cust Item ID:**

Required Date: 6/23/2011 **Req'd Qty:** 1.00 **Customer:**

Reference:

Run Start

Approvals: **Process Plan:** _____ **Date:** _____ **Tooling:** _____ **Date:** _____

Stop

QC: _____ **Date:** _____ **SPC (Y/N):** _____ **Date:** _____

Sequence ID/ Work Center ID	Operation Description	Set Up/ Run Hours	Tool ID	Tool #	Plan Code	Accept Qty	Reject Qty	Reject Number	Insp. Stamp
123	QC5- Inspect part completeness to step on W/O	0.00				1			
QC	**Memo**	0.00							
Quality Control	***Pressure Test as per dwg D4055***								
130	Chemical Conversion Coat per QSI005 4.1	0.00				1			
HandFinish	**Memo**	0.00							
Hand Finishing	1- brush alodine on tank. No alodine inside								
140	QC3- Inspect Part Finish	0.00				1X			
QC	**Memo**	0.00							
Quality Control									

11/07/05

Tested with soap and water and submerged tank in water at 3.5 psi for 1 hr. No Leaks

8 11/07/05

1 Ø BR 11-7-6.

1X Ø M 11/07/06

Dart Aerospace Ltd

W/O:		WORK ORDER CHANGES					
DATE	STEP	PROCEDURE CHANGE	By	Date	Qty	Approval Chief Eng / Prod Mgr	Approval QC Inspector

Part No: _____ **PAR #:** _____ **Fault Category:** _____ **NCR:** Yes No **DQA:** _____ **Date:** _____

Resolution: _____ **Disposition:** _____ **QA: N/C Closed:** _____ **Date:** _____

NCR:		WORK ORDER NON-CONFORMANCE (NCR)						
DATE	STEP	Description of NC Section A	Corrective Action Section B			Verification Section C	Approval Chief Eng	Approval QC Inspector
			Initial Chief Eng	Action Description Chief Eng	Sign & Date			

NOTE: Date & initial all entries

Work Order ID 71012

Tuesday, June 21, 2011 8:21:05 AM

Item ID: D4055-041 **Accept** **Setup Start**

Revision ID: **Stop**

Item Name: Fuel Tank Assembly

Start Date: 6/21/2011 **Start Qty:** 1.00 **Cust Item ID:**

Required Date: 6/23/2011 **Req'd Qty:** 1.00 **Customer:**

Reference:

Approvals: **Process Plan:** _____ **Date:** _____ **Tooling:** _____ **Date:** _____ **Run Start**

QC: _____ **Date:** _____ **SPC (Y/N):** _____ **Date:** _____ **Stop**

Sequence ID/ Work Center ID	Operation Description	Set Up/ Run Hours	Tool ID	Tool #	Plan Code	Accept Qty	Reject Qty	Reject Number	Insp. Stamp
170	Grey Sandtex(Ref:4.3.5.6) per QSI005 4.3	0.00							
Powdercoat									
Powder Coating	**Memo**	0.00							
	Mask prior to powdercoat								
	Start Time: ~~9:30~~ 11:20								
	Oven Temperature: 320°F								
	Finish Time: ~~10:00~~ 11:50								
180	QC3- Inspect Part Finish	0.00							
QC									
Quality Control	**Memo**	0.00							
182	Repressure test as per Seq. 123								
185		0.00							
SprayPaint									
Spray Painting	**Memo**	0.00							
	Seal inside of tank using Sloshing Sealer as per dwg								

M115128

11/07/06

5 11/07/06

11/07/06

Test complete & no leaks 11/07/06

1 11-7-8

Dart Aerospace Ltd

W/O:		WORK ORDER CHANGES					
DATE	STEP	PROCEDURE CHANGE	By	Date	Qty	Approval Chief Eng / Prod Mgr	Approval QC Inspector

Part No: _____ **PAR #:** _____ **Fault Category:** _____ **NCR:** Yes No **DQA:** _____ **Date:** _____

Resolution: _____ **Disposition:** _____ **QA: N/C Closed:** _____ **Date:** _____

NCR:		WORK ORDER NON-CONFORMANCE (NCR)						
DATE	STEP	Description of NC Section A	Corrective Action Section B			Verification Section C	Approval Chief Eng	Approval QC Inspector
			Initial Chief Eng	Action Description Chief Eng	Sign & Date			

NOTE: Date & initial all entries

Work Order ID 71012

Tuesday, June 21, 2011 8:21:05 AM

Item ID: D4055-041
Revision ID:
Item Name: Fuel Tank Assembly
Start Date: 6/21/2011 **Start Qty:** 1.00
Required Date: 6/23/2011 **Req'd Qty:** 1.00
Reference:

Accept

Setup Start
Stop

Cust Item ID:
Customer:

Run Start
Stop

Approvals: **Process Plan:** _____ **Date:** _____ **Tooling:** _____ **Date:** _____
QC: _____ **Date:** _____ **SPC (Y/N):** _____ **Date:** _____

Sequence ID/ Work Center ID	Operation Description	Set Up/ Run Hours	Tool ID	Tool #	Plan Code	Accept Qty	Reject Qty	Reject Number	Insp. Stamp
190		0.00							
Small Fab	**Memo**	0.00							
Small Fab	Assemble as per dwg								
200	QC5- Inspect part completeness to step on W/O	0.00							
QC	**Memo**	0.00							
Quality Control									
220	QC5- Inspect part completeness to step on W/O	0.00							
QC	**Memo**	0.00							
Quality Control									

PTO

11/07/06

11/07/08

8/11/07/08

Dart Aerospace Ltd

W/O:		WORK ORDER CHANGES					
DATE	STEP	PROCEDURE CHANGE	By	Date	Qty	Approval Chief Eng / Prod Mgr	Approval QC Inspector

Part No: _____ **PAR #:** _____ **Fault Category:** _____ **NCR:** Yes No **DQA:** _____ **Date:** _____

Resolution: _____ **Disposition:** _____ **QA: N/C Closed:** _____ **Date:** _____

NCR:		WORK ORDER NON-CONFORMANCE (NCR)						
DATE	STEP	Description of NC Section A	Corrective Action Section B			Verification Section C	Approval Chief Eng	Approval QC Inspector
			Initial Chief Eng	Action Description Chief Eng	Sign & Date			
11.07.07	190	BOLT TOO LARGE FOR CONNECTOR HOLE BY 0.020" R.C. SUPPLIED PART SMALL	11.07.07	ACCEPTABLE TO ENLARGE HOLE TO FIT BOLT.	11/07/07	11/07/07	11.07.07	11/7/07

NOTE: Date & initial all entries

H:\fFORMS\Quality Assurance\approved QA\NCRWO RevE

Work Order ID 71012

Tuesday, June 21, 2011 8:21:05 AM

Item ID: D4055-041
Revision ID:
Item Name: Fuel Tank Assembly
Start Date: 6/21/2011 **Start Qty:** 1.00
Required Date: 6/23/2011 **Req'd Qty:** 1.00
Reference:

Accept

Setup Start
Stop

Cust Item ID:
Customer:

Run Start
Stop

Approvals: **Process Plan:** _____ **Date:** _____ **Tooling:** _____ **Date:** _____
QC: _____ **Date:** _____ **SPC (Y/N):** _____ **Date:** _____

Sequence ID/ Work Center ID	Operation Description	Set Up/ Run Hours	Tool ID	Tool #	Plan Code	Accept Qty	Reject Qty	Reject Number	Insp. Stamp
230	Identify as per dwg & Stock Location:_____	0.00							
Packaging	**Memo**	0.00							
Packaging									
240	QC21- Final Inspection - Work Order Release	0.00							
QC	**Memo**	0.00							
Quality Control									

4/1/3/8

CK 11/07/08

11/07/08

Dart Aerospace Ltd

W/O:		WORK ORDER CHANGES					
DATE	STEP	PROCEDURE CHANGE	By	Date	Qty	Approval Chief Eng / Prod Mgr	Approval QC Inspector

Part No: _____ **PAR #:** _____ **Fault Category:** _____ **NCR:** Yes No **DQA:** _____ **Date:** _____

Resolution: _____ **Disposition:** _____ **QA: N/C Closed:** _____ **Date:** _____

NCR:		WORK ORDER NON-CONFORMANCE (NCR)						
DATE	STEP	Description of NC Section A	Corrective Action Section B			Verification Section C	Approval Chief Eng	Approval QC Inspector
			Initial Chief Eng	Action Description Chief Eng	Sign & Date			

NOTE: Date & initial all entries

Picklist Print

Tuesday, June 21, 2011 8:21:12 AM

Work Order ID: 71012

Parent Item: D4055-041

Parent Item Name: Fuel Tank Assembly

Start Date: 6/21/2011 **Required Date:** 6/23/2011

Start Qty: 1.00 **Required Qty:** 1.00

Comments: IPP rev A 10.03.08 new issue prelim EC verified by:DD IPP Rev:B 10.05.17 ECN10-562 DD verf:EC IPP Rev C: 10.11.23 revised pick list EC verifiedby:DD IPP Rev D: 11.06.01 per D4055 revB EC verified by:DD

Component Item ID/ Item Name	Replacement Item ID	Mfg/ Purch	Bin Item	Primary Location	Last Location	Route Seq ID	Unit of Measure	Qty on Hand	Qty per Kit	Total Qty	Qty Issued	Date Issued	Status
D3997-1 Placard		Manufactured	No			190	Each	4.0000	1	1	11/07/08		
				Location		**Loc Qty**		**Loc Code**					
				ST104		4							
					68930	4				1			
D3997-5 Placard		Manufactured	No			190	Each	5.0000	2	2	11/07/08		
				Location		**Loc Qty**		**Loc Code**					
				ST104		5							
					65436	5				2			
D3997-11 Placard		Manufactured	No			190	Each	9.0000	1	1	11/07/08		
				Location		**Loc Qty**		**Loc Code**					
				ST104		9							
					65124	9				1			
D3997-17 Placard		Manufactured	No			190	Each	9.0000	1	1	11/07/08		
				Location		**Loc Qty**		**Loc Code**					
				ST104		9							
					55410	1							
					65125	8				1			

Dart Aerospace Ltd

W/O:		WORK ORDER CHANGES					
DATE	STEP	PROCEDURE CHANGE	By	Date	Qty	Approval Chief Eng / Prod Mgr	Approval QC Inspector

Part No: _____ **PAR #:** _____ **Fault Category:** _____ **NCR:** Yes No **DQA:** _____ **Date:** _____

Resolution: _____ **Disposition:** _____ **QA: N/C Closed:** _____ **Date:** _____

NCR:		WORK ORDER NON-CONFORMANCE (NCR)						
DATE	STEP	Description of NC Section A	Corrective Action Section B			Verification Section C	Approval Chief Eng	Approval QC Inspector
			Initial Chief Eng	Action Description Chief Eng	Sign & Date			

NOTE: Date & initial all entries

H:\fFORMS\Quality Assurance\approved QA\NCRWO RevE

Picklist Print

Tuesday, June 21, 2011 8:21:12 AM

8

Work Order ID: 71012

Parent Item: D4055-041

Parent Item Name: Fuel Tank Assembly

Start Date: 6/21/2011 **Required Date:** 6/23/2011

Start Qty: 1.00 **Required Qty:** 1.00

D3997-29	Manufactured	No		190	Each	9.0000	1	1	11/07/08
Placard									

Location	Loc Qty	Loc Code
ST104	9	
65126	9	

D3997-43	Manufactured	No		190	Each	8.0000	1	1	11/07/08
Placard									

Location	Loc Qty	Loc Code
ST104	8	
65127	8	

D3999-7	Manufactured	No		100	Each	4.0000	1	1	11.06.28
Corner									

Location	Loc Qty	Loc Code
ENG	4	
55645	4	

D3999-9	Manufactured	No		100	Each	3.0000	1	1	11.06.28
Angle									

Location	Loc Qty	Loc Code
WA013	3	
55646	3	

D3999-11	Manufactured	No		100	Each	3.0000	1	1	11.06.28
Earth Tab									

Location	Loc Qty	Loc Code
WA013	3	
55863	3	

Dart Aerospace Ltd

W/O:		WORK ORDER CHANGES					
DATE	STEP	PROCEDURE CHANGE	By	Date	Qty	Approval Chief Eng / Prod Mgr	Approval QC Inspector

Part No: _____ **PAR #:** _____ **Fault Category:** _____ **NCR:** Yes No **DQA:** _____ **Date:** _____

Resolution: _____ **Disposition:** _____ **QA: N/C Closed:** _____ **Date:** _____

NCR:		WORK ORDER NON-CONFORMANCE (NCR)						
DATE	STEP	Description of NC Section A	Corrective Action Section B			Verification Section C	Approval Chief Eng	Approval QC Inspector
			Initial Chief Eng	Action Description Chief Eng	Sign & Date			

NOTE: Date & initial all entries

H:\fFORMS\Quality Assurance\approved QA\NCRWO RevE

Picklist Print

Tuesday, June 21, 2011 8:21:13 AM

8

Work Order ID: 71012

Parent Item: D4055-041

Parent Item Name: Fuel Tank Assembly

Start Date: 6/21/2011 **Required Date:** 6/23/2011

Start Qty: 1.00 **Required Qty:** 1.00

D3999-041	Manufactured	No	100	Each	2.0000	1	1	11·06·28
Baffle Assembly, Aft								

Location	Loc Qty	Loc Code	
WA014	2		
65437	2		1

D3999-043	Manufactured	No	100	Each	2.0000	1	1	11·06·28
Baffle Assembly, Fwd								

Location	Loc Qty	Loc Code	
WA014	2		
65439	2		1

D4000-1	Manufactured	No	100	Each	5.0000	1	1	11·06·21
Fuel Supply Fitting								

Location	Loc Qty	Loc Code	
WA013	5		
65716	5		1

D4000-5	Manufactured	No	100	Each	3.0000	1	1	11·06·21
Fuel Tank Vent Fitting								

Location	Loc Qty	Loc Code	
WA013	3		
65444	3		1

D4000-9	Manufactured	No	100	Each	19.0000	3	3	11·06·29
Grommet								

Location	Loc Qty	Loc Code	
WA013	19		
65109	5		2
70250	14		1

Dart Aerospace Ltd

W/O:		WORK ORDER CHANGES					
DATE	STEP	PROCEDURE CHANGE	By	Date	Qty	Approval Chief Eng / Prod Mgr	Approval QC Inspector

Part No: _____ **PAR #:** _____ **Fault Category:** _____ **NCR:** Yes No **DQA:** _____ **Date:** _____

Resolution: _____ **Disposition:** _____ **QA: N/C Closed:** _____ **Date:** _____

NCR:		WORK ORDER NON-CONFORMANCE (NCR)						
DATE	STEP	Description of NC Section A	Corrective Action Section B			Verification Section C	Approval Chief Eng	Approval QC Inspector
			Initial Chief Eng	Action Description Chief Eng	Sign & Date			

NOTE: Date & initial all entries

H:\fFORMS\Quality Assurance\approved QA\NCRWO RevE

Picklist Print

Tuesday, June 21, 2011 8:21:13 AM

Work Order ID: 71012

Parent Item: D4055-041

Parent Item Name: Fuel Tank Assembly

Start Date: 6/21/2011 **Required Date:** 6/23/2011

Start Qty: 1.00 **Required Qty:** 1.00

D4000-043 Drain Fitting Assembly, Fwd	Manufactured	No		100	Each	1.0000	1	1	11·06·29

Location	Loc Qty	Loc Code	
WA013 ~~B400~~	1		
65442 B70963	1		1

D4000-045 Fuel Pickup Fitting Assemby	Manufactured	No		100	Each	2.0000	1	1	11·06·30

Location	Loc Qty	Loc Code	
WA013	2		
68385	2		1

D4000-041 Drain Fitting Assembly, Aft	Manufactured	No		100	Each	2.0000	1	1	11·06·29

Location	Loc Qty	Loc Code	
WA013	2		
69096	2		1

D4001-1 Fitting	Manufactured	No		100	Each	4.0000	1	1	11·06·21

Location	Loc Qty	Loc Code	
WA013	4		
66840	4		~~3~~ 1

D4008-11 Hinge Half	Manufactured	No		100	Each	4.0000	1	1	11·06·30

Location	Loc Qty	Loc Code	
ST108 B65445	4		1
67650	4		

Dart Aerospace Ltd

W/O:		WORK ORDER CHANGES					
DATE	STEP	PROCEDURE CHANGE	By	Date	Qty	Approval Chief Eng / Prod Mgr	Approval QC Inspector

Part No: _____ PAR #: _____ Fault Category: _____ NCR: Yes No DQA: _____ Date: _____

Resolution: _____ Disposition: _____ QA: N/C Closed: _____ Date: _____

NCR:		WORK ORDER NON-CONFORMANCE (NCR)						
DATE	STEP	Description of NC Section A	Corrective Action Section B			Verification Section C	Approval Chief Eng	Approval QC Inspector
			Initial Chief Eng	Action Description Chief Eng	Sign & Date			

NOTE: Date & initial all entries

H:\fFORMS\Quality Assurance\approved QA\NCRWO RevE

Picklist Print

Tuesday, June 21, 2011 8:21:13 AM

8

Work Order ID: 71012

Parent Item: D4055-041

Parent Item Name: Fuel Tank Assembly

Start Date: 6/21/2011 **Required Date:** 6/23/2011

Start Qty: 1.00 **Required Qty:** 1.00

D4008-041	Manufactured	No	190	Each	1.0000	1	1		
Fuel Filler Splash Guard Assembly									

Location	Loc Qty	Loc Code	
ST108	1		
67637	1		

D4023-3	Manufactured	No	100	Each	8.0000	1	1		
Cap and Flange									

Location	Loc Qty	Loc Code	
ST110	8		
70204	6		
70226	2		

D4025-1	Manufactured	No	100	Each	2.0000	1	1		
Fuel Quantity Sender									

Location	Loc Qty	Loc Code	
ST241A	2		
65131	2		

D4055-11	Manufactured	No	100	Each	5.0000	1	1		
Tank Front and Bottom									

Location	Loc Qty	Loc Code	
WA013	5		
65447	2		
68500	3		

Dart Aerospace Ltd

W/O:		WORK ORDER CHANGES					
DATE	STEP	PROCEDURE CHANGE	By	Date	Qty	Approval Chief Eng / Prod Mgr	Approval QC Inspector

Part No: _____ **PAR #:** _____ **Fault Category:** _____ **NCR:** Yes No **DQA:** _____ **Date:** _____

Resolution: _____ **Disposition:** _____ **QA: N/C Closed:** _____ **Date:** _____

NCR:		WORK ORDER NON-CONFORMANCE (NCR)						
DATE	STEP	Description of NC Section A	Corrective Action Section B			Verification Section C	Approval Chief Eng	Approval QC Inspector
			Initial Chief Eng	Action Description Chief Eng	Sign & Date			

NOTE: Date & initial all entries

H:\fFORMS\Quality Assurance\approved QA\NCRWO RevE

Picklist Print

Tuesday, June 21, 2011 8:21:14 AM

Work Order ID: 71012

Parent Item: D4055-041

Parent Item Name: Fuel Tank Assembly

Start Date: 6/21/2011 **Required Date:** 6/23/2011

Start Qty: 1.00 **Required Qty:** 1.00

D4055-9	Manufactured	No	100	Each	6.0000	1	1	11·06·29
Tank Back								

Location	Loc Qty	Loc Code
WA013	6	
63948	1	
65451	2	
~~66842~~	3	1

D4055-7	Manufactured	No	100	Each	2.0000	1	1	11·06·30
Tank Fwd End								

Location	Loc Qty	Loc Code
WA014 B70251	2	1
65450	2	

D4055-5	Manufactured	No	100	Each	6.0000	1	1	11·06·29
Tank Upper Cut Out								

Location	Loc Qty	Loc Code
ST119	2	
65449	2	1
WA013	4	
67737	4	

D4055-3	Manufactured	No	100	Each	4.0000	1	1	11·06·29
Tank Aft End								

Location	Loc Qty	Loc Code
WA	2	
~~68501~~	2	
WA014	2	
65448	2	1

Dart Aerospace Ltd

W/O:		WORK ORDER CHANGES					
DATE	STEP	PROCEDURE CHANGE	By	Date	Qty	Approval Chief Eng / Prod Mgr	Approval QC Inspector

Part No: _____ **PAR #:** _____ **Fault Category:** _____ **NCR:** Yes No **DQA:** _____ **Date:** _____

Resolution: _____ **Disposition:** _____ **QA: N/C Closed:** _____ **Date:** _____

NCR:		WORK ORDER NON-CONFORMANCE (NCR)						
DATE	STEP	Description of NC Section A	Corrective Action Section B			Verification Section C	Approval Chief Eng	Approval QC Inspector
			Initial Chief Eng	Action Description Chief Eng	Sign & Date			

NOTE: Date & initial all entries

H:\fFORMS\Quality Assurance\approved QA\NCRWO RevE

Picklist Print

Tuesday, June 21, 2011 8:21:14 AM

Work Order ID: 71012

Parent Item: D4055-041

Parent Item Name: Fuel Tank Assembly

Start Date: 6/21/2011 **Required Date:** 6/23/2011

Start Qty: 1.00 **Required Qty:** 1.00

D4055-1	Manufactured	No	100	Each	4.0000	1	1	11·06-29
Tank Top								

Location	Loc Qty	Loc Code
WA	2	
68502	2	1
WA013	2	
65446	2	

D4057-1	Manufactured	No	100	Each	17.0000	3	3	11·06·29
Retaining Ring								

Location	Loc Qty	Loc Code
WA013	17	
55826	17	3

AN3H5A	Purchased	No	190	Each	22.0000	5	5	11/07/08
Bolt								

Location	Loc Qty	Loc Code
ST350	22	
114941	2	
116704	20	5

NAS1149D0363J	Purchased	No	190	Each	1,777.000	5	5	11/07/08
Washer								

Location	Loc Qty	Loc Code
ST298	1777	
117291	777	5
117505	500	
117601	500	

Dart Aerospace Ltd

W/O:		WORK ORDER CHANGES					
DATE	STEP	PROCEDURE CHANGE	By	Date	Qty	Approval Chief Eng / Prod Mgr	Approval QC Inspector

Part No: _____ **PAR #:** _____ **Fault Category:** _____ **NCR:** Yes No **DQA:** _____ **Date:** _____

Resolution: _____ **Disposition:** _____ **QA: N/C Closed:** _____ **Date:** _____

NCR:		WORK ORDER NON-CONFORMANCE (NCR)						
DATE	STEP	Description of NC Section A	Corrective Action Section B			Verification Section C	Approval Chief Eng	Approval QC Inspector
			Initial Chief Eng	Action Description Chief Eng	Sign & Date			

NOTE: Date & initial all entries

H:\fFORMS\Quality Assurance\approved QA\NCRWO RevE

Picklist Print

Tuesday, June 21, 2011 8:21:14 AM

Work Order ID: 71012

Parent Item: D4055-041

Parent Item Name: Fuel Tank Assembly

Start Date: 6/21/2011 **Required Date:** 6/23/2011

Start Qty: 1.00 **Required Qty:** 1.00

D4404-1 Cushion	Manufactured	No	190	Each	8.0000	1	1	11/07/08

Location	Loc Qty	Loc Code
ST404	8	
70247	8	

Dart Aerospace Ltd

W/O:		WORK ORDER CHANGES					
DATE	STEP	PROCEDURE CHANGE	By	Date	Qty	Approval Chief Eng / Prod Mgr	Approval QC Inspector

Part No: _____ **PAR #:** _____ **Fault Category:** _____ **NCR:** Yes No **DQA:** _____ **Date:** _____

Resolution: _____ **Disposition:** _____ **QA: N/C Closed:** _____ **Date:** _____

NCR:		WORK ORDER NON-CONFORMANCE (NCR)						
DATE	STEP	Description of NC Section A	Corrective Action Section B			Verification Section C	Approval Chief Eng	Approval QC Inspector
			Initial Chief Eng	Action Description Chief Eng	Sign & Date			

NOTE: Date & initial all entries

H:\fFORMS\Quality Assurance\approved QA\NCRWO RevE

SHOP COPY
RETURN TO
ENGINEERING
UNCONTROLLED COPY
SUBJECT TO AMENDMENT
WITHOUT NOTICE
WORK ORDER
NO. 71012

pl 11-06-21

RELEASED
2011-05-30

ITEM NO.	QTY. -041	PART NUMBER	DESCRIPTION	
1	X	D4055-041	FUEL TANK ASSEMBLY	
2	1	D3997-1	PLACARD "FUEL JET A1"	
3	2	D3997-5	PLACARD "AUX FUEL DRAIN"	
4	1	D3997-11	PLACARD "LOADING"	
5	1	D3997-17	PLACARD "STOWAGE"	
6	1	D3997-29	PLACARD "WARNING"	
7	1	D3997-43	PLACARD "EARTH"	
8	1	D3999-7	CORNER	
9	1	D3999-9	ANGLE	
10	1	D3999-11	EARTH TAB	
11	1	D3999-041	BAFFLE ASSEMBLY, AFT	
12	1	D3999-043	BAFFLE ASSEMBLY, FWD	
13	1	D4000-1	FUEL SUPPLY FITTING	
14	1	D4000-5	FUEL TANK VENT FITTING	
15	3	D4000-9	GROMMET	
16	1	D4000-041	AFT FUEL SUMP DRAIN ASSEMBLY	B
17	1	D4000-043	FORWARD FUEL SUMP DRAIN ASSEMBLY	B
18	1	D4000-045	FUEL PICK UP AND STRAINER ASSEMBLY	B
19	1	D4001-1	FITTING	
20	1	D4008-11	TANK HINGE HALF	
21	1	D4008-041	FUEL FILLER SPLASH GUARD ASSEMBLY	
22	1	D4023-3	FUEL CAP	B
23	1	D4025-1	FUEL SENDER	
24	1	D4055-1	TANK TOP	
25	1	D4055-3	TANK AFT END	
26	1	D4055-5	TANK UPPER CUT OUT	
27	1	D4055-7	TANK FORWARD END	
28	1	D4055-9	TANK BACK	
29	1	D4055-11	TANK FRONT AND BOTTOM	
30	3	D4057-1	RETAINING RING	
31	1	D4404-1	CUSHION	B
32	5	AN3H5A	BOLT	
33	5	NAS1149D0363J	WASHER	

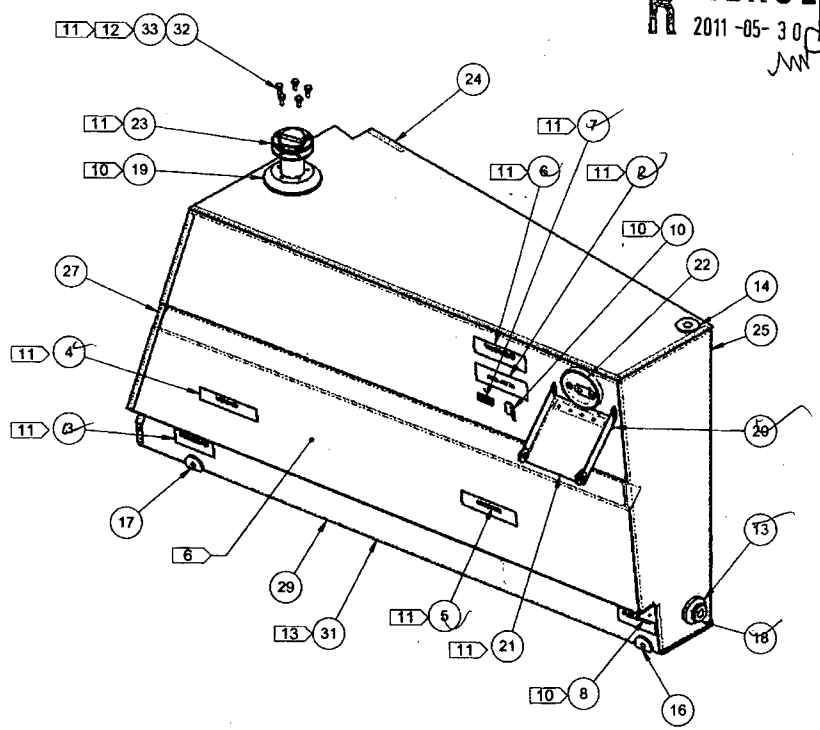

NOTES:
1) MATERIAL: N/A
2) FINISH: TOUCH UP CHEMICAL CONVERSION COAT PER DART QSI 005 4.1 (B)
POWDER COAT "GREY SANDTEX" (4.3.5.6) PER DART QSI 005 4.3
3) TOLERANCES: PER DART QSI 018 UNLESS OTHERWISE NOTED
4) UNITS: INCHES UNLESS OTHERWISE NOTED
5) BREAK SHARP EDGES: 0.005 TO 0.010 MAX
6) IDENTIFICATION: IDENTIFY WITH DART P/N "D350-794-041" USING D2729-1 RED DECAL
7) WEIGHT: 27.57 lbs
8) WELD PER DART QSI 004
9) CAP ALL TANK ACCESS POINTS AND PRESSURIZE TANK TO 1.5 PSI AFTER ASSEMBLY. VERIFY NO LEAKS
10) MASK PRIOR TO POWDER COAT
11) INSTALL AFTER POWDER COAT. REMOVE TEXTURED FINISH LOCALLY PRIOR TO INSTALLATION
12) LOCKWIRE BOLTS AFTER INSTALLATION PER AC 43.13 OR MS33540
13) INSTALL CUSHION AFTER POWDER COAT USING CONTACT CEMENT. TRIM TO FIT IF REQUIRED.

D4055-041 FUEL TANK ASSEMBLY

REV.	DESCRIPTION	BY	DATE
B	MOVE CAP POSITION AND CHANGE CAP DESIGN, CHANGE FINISH REQUIREMENTS FOR ALL PARTS, ADD CUSHION UNDER TANK, CORRECT PART NUMBERS		11.05.12
A	NEW ISSUE	HS	10.04.16

DESIGN		DART AEROSPACE LTD HAWKESBURY, ONTARIO, CANADA	
DRAWN		DRAWING NO. D4055	REV. B
CHECKED			SHEET 1 OF 15
MFG. APPR.		TITLE TANK	SCALE NTS
APPROVED			
DE APPR.			
DATE	11.05.12		

COPYRIGHT © 2010 BY DART AEROSPACE LTD
THIS DOCUMENT IS PRIVATE AND CONFIDENTIAL AND IS SUPPLIED ON THE EXPRESS CONDITION THAT IT IS NOT TO BE USED FOR ANY PURPOSE OR COPIED OR COMMUNICATED TO ANY OTHER PERSON WITHOUT WRITTEN PERMISSION FROM DART AEROSPACE LTD.

Dart Aerospace Ltd

W/O:		WORK ORDER CHANGES					
DATE	STEP	PROCEDURE CHANGE	By	Date	Qty	Approval Chief Eng / Prod Mgr	Approval QC Inspector

Part No: _____ PAR #: _____ Fault Category: _____ NCR: Yes No DQA: _____ Date: _____

Resolution: _____ Disposition: _____ QA: N/C Closed: _____ Date: _____

NCR:		WORK ORDER NON-CONFORMANCE (NCR)						
DATE	STEP	Description of NC Section A	Corrective Action Section B			Verification Section C	Approval Chief Eng	Approval QC Inspector
			Initial Chief Eng	Action Description Chief Eng	Sign & Date			

NOTE: Date & initial all entries

H:\fFORMS\Quality Assurance\approved QA\NCRWO RevE

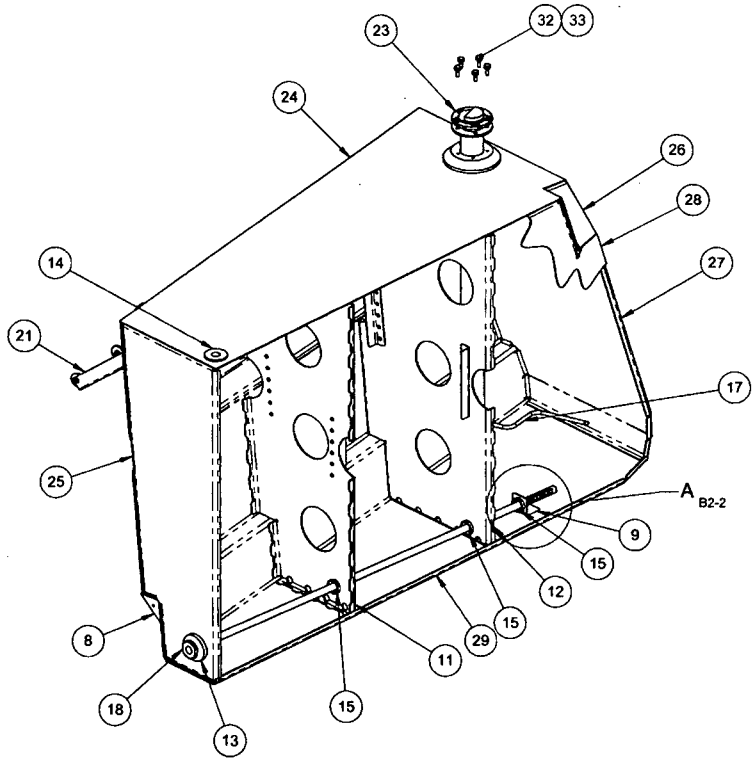

D4055-041 FUEL TANK ASSEMBLY
D4055-9 TANK BACK REMOVED
TO SHOW INTERIOR DETAIL

RELEASED
2011-05-30

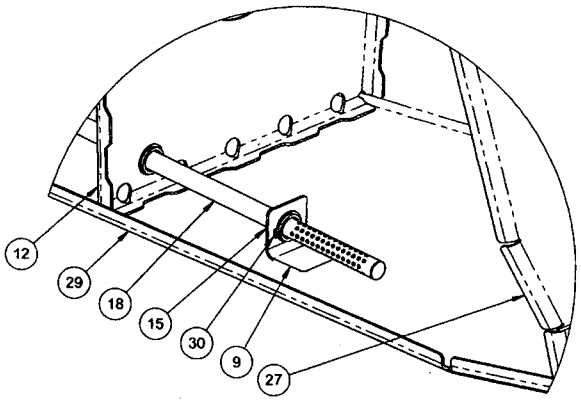

DETAIL A
ROTATED FOR CLARITY
SCALE 2X
B6-2

w/o 7/6/12

DESIGN		**DART AEROSPACE LTD** HAWKESBURY, ONTARIO, CANADA
DRAWN		
CHECKED		DRAWING NO. D4055 — REV. B — SHEET 2 OF 15
MFG. APPR.		
APPROVED		TITLE TANK — SCALE NTS
DE APPR.		
DATE 11.05.12		

COPYRIGHT © 2010 BY DART AEROSPACE LTD
THIS DOCUMENT IS PRIVATE AND CONFIDENTIAL AND IS SUPPLIED ON THE EXPRESS CONDITION THAT IT IS NOT TO BE USED FOR ANY PURPOSE OR COPIED OR COMMUNICATED TO ANY OTHER PERSON WITHOUT WRITTEN PERMISSION FROM DART AEROSPACE LTD.

Dart Aerospace Ltd

W/O:		WORK ORDER CHANGES					
DATE	STEP	PROCEDURE CHANGE	By	Date	Qty	Approval Chief Eng / Prod Mgr	Approval QC Inspector

Part No: _____ **PAR #:** _____ **Fault Category:** _____ **NCR:** Yes No **DQA:** _____ **Date:** _____

Resolution: _____ **Disposition:** _____ **QA: N/C Closed:** _____ **Date:** _____

NCR:		WORK ORDER NON-CONFORMANCE (NCR)						
DATE	STEP	Description of NC Section A	Corrective Action Section B			Verification Section C	Approval Chief Eng	Approval QC Inspector
			Initial Chief Eng	Action Description Chief Eng	Sign & Date			

NOTE: Date & initial all entries

H:\fFORMS\Quality Assurance\approved QA\NCRWO RevE

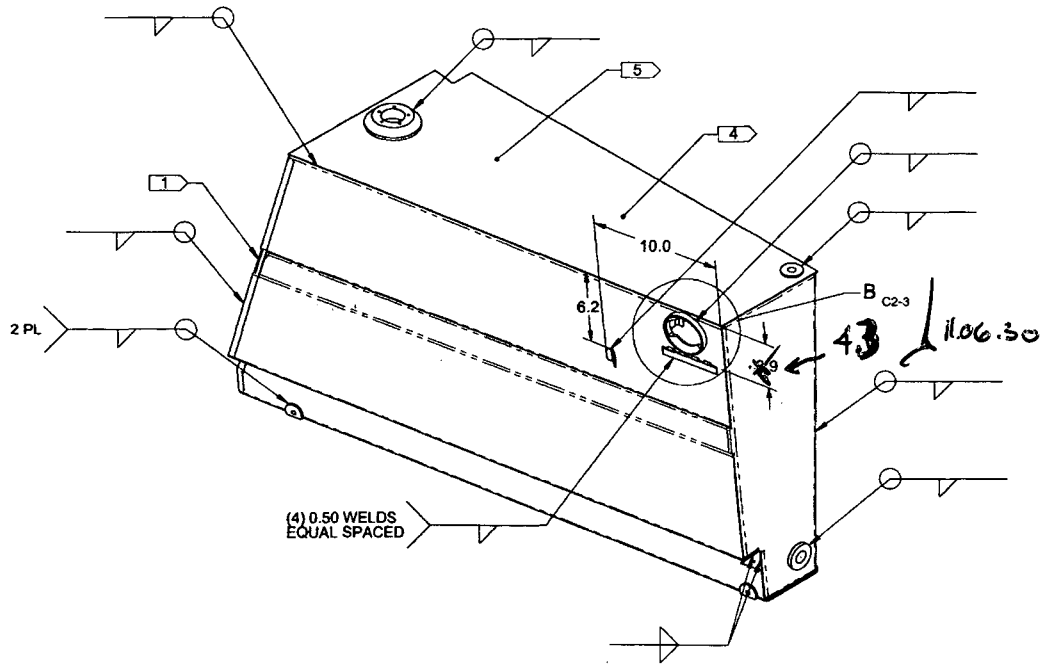

D4055-041 FUEL TANK ASSEMBLY
WELDING DETAIL

43 1.06.30 TO REMOVE INTERFERENCE OF SPLASH GUARD WITH FUEL CAP OTHER ASSY.

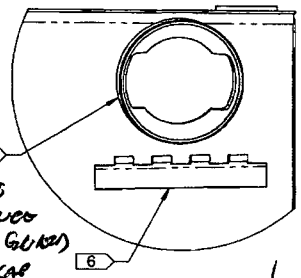

W 6/7/012

DETAIL B
ROTATED FOR CLARITY
SCALE 2X

C4-3

RELEASED
2011 -05- 30

NOTES:
1) TRIM FLANGES AS REQUIRED TO FIT ASSEMBLY
2) FINAL CHECK BEFORE LAST PANEL INSTALLED
- END OF FUEL PICK UP TUBE IS 0.60 OFF THE TANK FLOOR AND 1.96 FROM SIDE WALL
- FWD AND AFT DRAIN TUBES EXTEND TO CENTER OF TANK
- ALL SWARF REMOVED
3) AFTER FINAL ASSEMBLY, SLOSH TANK WITH MIL-S-4383 OR EQUIVALENT (PR-1005-L BUNA-N-SLOSH)
4) ACCEPTABLE TO DRILL 6 (TYP) Ø0.312 HOLES IN TANK TOP TO WELD TOP TO AFT BAFFLE (1 HOLE PER BAFFLE TAB)
5) ACCEPTABLE TO DRILL 7 (TYP) Ø0.312 HOLES IN TANK TOP TO WELD TOP TO FWD BAFFLE (1 HOLE PER BAFFLE TAB)
6) CENTER HINGE BELOW FUEL CAP FLANGE
7) POSITION FUEL CAP FLANGE AS SHOWN, ELONGATED HOLE APPROXIMATELY HORIZONTAL
8) POSITION FUEL CAP FLANGE SO THAT INNER FACE IS FLUSH WITH INSIDE OF TANK

DESIGN		DART AEROSPACE LTD HAWKESBURY, ONTARIO, CANADA
DRAWN		
CHECKED		DRAWING NO. D4055 — REV. B — SHEET 3 OF 15
MFG. APPR.		
APPROVED		TITLE: TANK — SCALE: NTS
DE APPR.		
DATE	11.05.12	

COPYRIGHT © 2010 BY DART AEROSPACE LTD
THIS DOCUMENT IS PRIVATE AND CONFIDENTIAL AND IS SUPPLIED ON THE EXPRESS CONDITION THAT IT IS NOT TO BE USED FOR ANY PURPOSE OR COPIED OR COMMUNICATED TO ANY OTHER PERSON WITHOUT WRITTEN PERMISSION FROM DART AEROSPACE LTD.

Dart Aerospace Ltd

W/O:		WORK ORDER CHANGES					
DATE	STEP	PROCEDURE CHANGE	By	Date	Qty	Approval Chief Eng / Prod Mgr	Approval QC Inspector

Part No: _____ **PAR #:** _____ **Fault Category:** _____ **NCR:** Yes No **DQA:** _____ **Date:** _____

Resolution: _____ **Disposition:** _____ **QA: N/C Closed:** _____ **Date:** _____

NCR:		WORK ORDER NON-CONFORMANCE (NCR)						
DATE	STEP	Description of NC Section A	Corrective Action Section B			Verification Section C	Approval Chief Eng	Approval QC Inspector
			Initial Chief Eng	Action Description Chief Eng	Sign & Date			

NOTE: Date & initial all entries

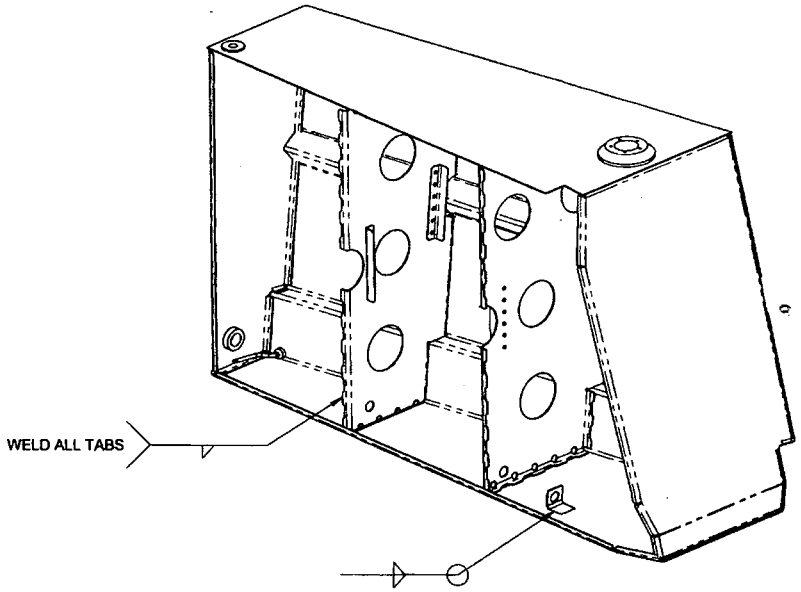

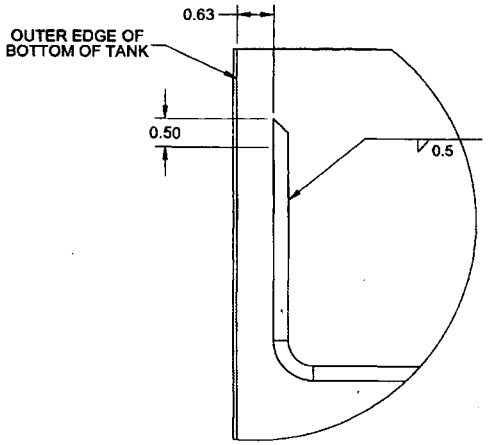

DRAIN TUBE INSTALLATION - TYP
VIEWED FROM ABOVE
FWD END SHOWN, AFT END OPPOSITE

D4055-041 FUEL TANK ASSEMBLY
WELDING DETAIL

ECO 71017

RELEASED
2011 -05- 30

DESIGN		**DART AEROSPACE LTD** HAWKESBURY, ONTARIO, CANADA
DRAWN		
CHECKED		DRAWING NO. D4055 — REV. B — SHEET 4 OF 15
MFG. APPR.		
APPROVED		TITLE: TANK — SCALE: NTS
DE APPR.		
DATE	11.05.12	

COPYRIGHT © 2010 BY DART AEROSPACE LTD
THIS DOCUMENT IS PRIVATE AND CONFIDENTIAL AND IS SUPPLIED ON THE EXPRESS CONDITION THAT IT IS NOT TO BE USED FOR ANY PURPOSE, OR COPIED OR COMMUNICATED TO ANY OTHER PERSON WITHOUT WRITTEN PERMISSION FROM DART AEROSPACE LTD.

Dart Aerospace Ltd

W/O:		WORK ORDER CHANGES					
DATE	STEP	PROCEDURE CHANGE	By	Date	Qty	Approval Chief Eng / Prod Mgr	Approval QC Inspector

Part No: _____ **PAR #:** _____ **Fault Category:** _____ **NCR:** Yes No **DQA:** _____ **Date:** _____

Resolution: _____ **Disposition:** _____ **QA: N/C Closed:** _____ **Date:** _____

NCR:		WORK ORDER NON-CONFORMANCE (NCR)						
DATE	STEP	Description of NC Section A	Corrective Action Section B			Verification Section C	Approval Chief Eng	Approval QC Inspector
			Initial Chief Eng	Action Description Chief Eng	Sign & Date			

NOTE: Date & initial all entries

H:\fFORMS\Quality Assurance\approved QA\NCRWO RevE

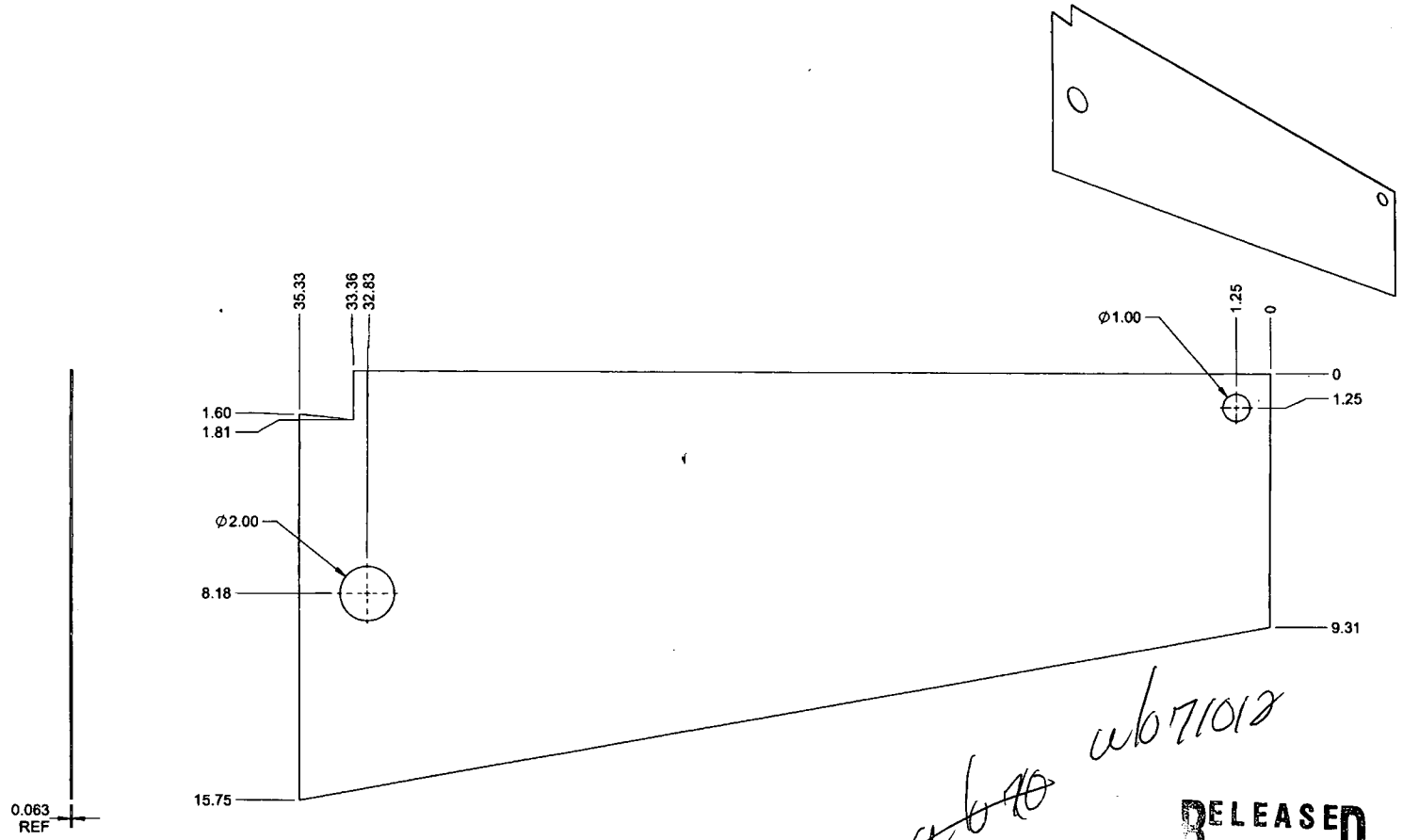

D4055-1 TANK TOP

RELEASED
2011 -05- 3 B

NOTES:
1) MATERIAL: 6061-T6/T62 ALUMINUM SHEET, 0.063 THICK
PER QQ-A-250/11 OR AMS-QQ-A-250/11
OR AMS 4025 OR AMS 4027 OR ASTM B209
REF DART SPEC M6061T6S.063
2) FINISH: CHEMICAL CONVERSION COAT PER DART QSI 005 4.1 (B)
3) TOLERANCES: PER DART QSI 018 UNLESS OTHERWISE NOTED
4) UNITS: INCHES UNLESS OTHERWISE NOTED
5) BREAK SHARP EDGES: 0.005 TO 0.010 MAX
6) IDENTIFICATION: N/A
7) WEIGHT: 2.68 lbs

DESIGN		DART AEROSPACE LTD HAWKESBURY, ONTARIO, CANADA
DRAWN		
CHECKED		DRAWING NO. D4055 — REV. B — SHEET 5 OF 15
MFG. APPR.		
APPROVED		TITLE: TANK — SCALE: NTS
DE APPR.		
DATE 11.05.12		

COPYRIGHT © 2010 BY DART AEROSPACE LTD
THIS DOCUMENT IS PRIVATE AND CONFIDENTIAL AND IS SUPPLIED ON THE EXPRESS CONDITION THAT IT IS NOT TO BE USED FOR ANY PURPOSE OR COPIED OR COMMUNICATED TO ANY OTHER PERSON WITHOUT WRITTEN PERMISSION FROM DART AEROSPACE LTD.

Dart Aerospace Ltd

W/O:		WORK ORDER CHANGES					
DATE	STEP	PROCEDURE CHANGE	By	Date	Qty	Approval Chief Eng / Prod Mgr	Approval QC Inspector

Part No: _____ **PAR #:** _____ **Fault Category:** _____ **NCR:** Yes No **DQA:** _____ **Date:** _____

Resolution: _____ **Disposition:** _____ **QA: N/C Closed:** _____ **Date:** _____

NCR:		WORK ORDER NON-CONFORMANCE (NCR)						
DATE	STEP	Description of NC Section A	Corrective Action Section B			Verification Section C	Approval Chief Eng	Approval QC Inspector
			Initial Chief Eng	Action Description Chief Eng	Sign & Date			

NOTE: Date & initial all entries

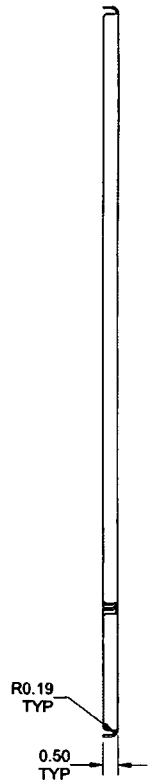

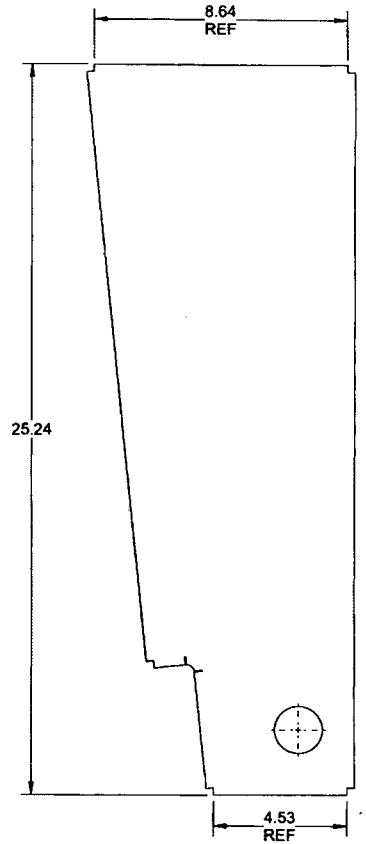

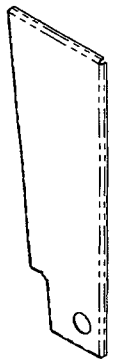

w/o 71012

RELEASED
2011 -05- 30
JW

D4055-3 TANK AFT END

NOTES:
1) MATERIAL: MADE FROM D4055-3F
2) FINISH: CHEMICAL CONVERSION COAT PER DART QSI 005 4.1
3) TOLERANCES: PER DART QSI 018 UNLESS OTHERWISE NOTED
4) UNITS: INCHES UNLESS OTHERWISE NOTED
5) BREAK SHARP EDGES: 0.005 TO 0.010 MAX
6) IDENTIFICATION: N/A
7) WEIGHT: 1.30 lbs

B

DESIGN		DART AEROSPACE LTD HAWKESBURY, ONTARIO, CANADA
DRAWN		
CHECKED		DRAWING NO. D4055 — REV. B — SHEET 6 OF 15
MFG. APPR.		
APPROVED		TITLE: TANK — SCALE: NTS
DE APPR.		
DATE	11.05.12	

COPYRIGHT © 2010 BY DART AEROSPACE LTD
THIS DOCUMENT IS PRIVATE AND CONFIDENTIAL AND IS SUPPLIED ON THE EXPRESS CONDITION THAT IT IS NOT TO BE USED FOR ANY PURPOSE OR COPIED OR COMMUNICATED TO ANY OTHER PERSON WITHOUT WRITTEN PERMISSION FROM DART AEROSPACE LTD.

Dart Aerospace Ltd

W/O:		WORK ORDER CHANGES					
DATE	STEP	PROCEDURE CHANGE	By	Date	Qty	Approval Chief Eng / Prod Mgr	Approval QC Inspector

Part No: _____ **PAR #:** _____ **Fault Category:** _____ **NCR:** Yes No **DQA:** _____ **Date:** _____

Resolution: _____ **Disposition:** _____ **QA: N/C Closed:** _____ **Date:** _____

NCR:		WORK ORDER NON-CONFORMANCE (NCR)						
DATE	STEP	Description of NC Section A	Corrective Action Section B			Verification Section C	Approval Chief Eng	Approval QC Inspector
			Initial Chief Eng	Action Description Chief Eng	Sign & Date			

NOTE: Date & initial all entries

w/o 7/012

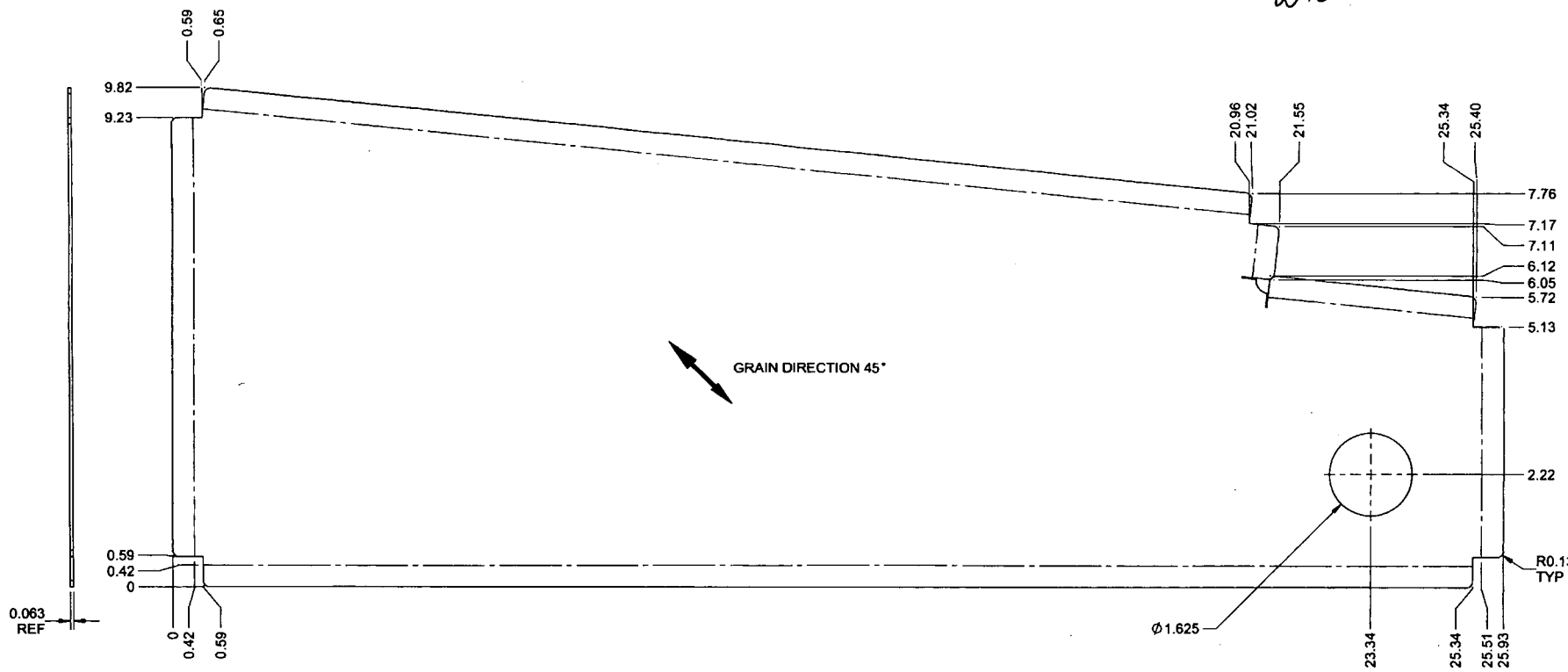

D4055-3F FLAT PATTERN

RELEASED
2011-05-20

NOTES:
1) MATERIAL: 6061-T6/T62 ALUMINUM SHEET, 0.063 THICK
PER QQ-A-250/11 OR AMS-QQ-A-250/11
OR AMS 4025 OR AMS 4027 OR ASTM B209
REF DART SPEC M6061T6S.063
2) FINISH: N/A
3) TOLERANCES: PER DART QSI 018 UNLESS OTHERWISE NOTED
4) UNITS: INCHES UNLESS OTHERWISE NOTED
5) BREAK SHARP EDGES: 0.005 TO 0.010 MAX
6) IDENTIFICATION: N/A
7) WEIGHT: 1.30 lbs

DESIGN		DART AEROSPACE LTD HAWKESBURY, ONTARIO, CANADA
DRAWN		
CHECKED		DRAWING NO. D4055 — REV. B — SHEET 7 OF 15
MFG. APPR.		
APPROVED		TITLE: TANK — SCALE: NTS
DE APPR.		
DATE	11.05.12	

COPYRIGHT © 2010 BY DART AEROSPACE LTD
THIS DOCUMENT IS PRIVATE AND CONFIDENTIAL AND IS SUPPLIED ON THE EXPRESS CONDITION THAT IT IS NOT TO BE USED FOR ANY PURPOSE OR COPIED OR COMMUNICATED TO ANY OTHER PERSON WITHOUT WRITTEN PERMISSION FROM DART AEROSPACE LTD

Dart Aerospace Ltd

W/O:		WORK ORDER CHANGES					
DATE	STEP	PROCEDURE CHANGE	By	Date	Qty	Approval Chief Eng / Prod Mgr	Approval QC Inspector

Part No: _____ **PAR #:** _____ **Fault Category:** _____ **NCR:** Yes No **DQA:** _____ **Date:** _____

Resolution: _____ **Disposition:** _____ **QA: N/C Closed:** _____ **Date:** _____

NCR:		WORK ORDER NON-CONFORMANCE (NCR)						
DATE	STEP	Description of NC Section A	Corrective Action Section B			Verification Section C	Approval Chief Eng	Approval QC Inspector
			Initial Chief Eng	Action Description Chief Eng	Sign & Date			

NOTE: Date & initial all entries

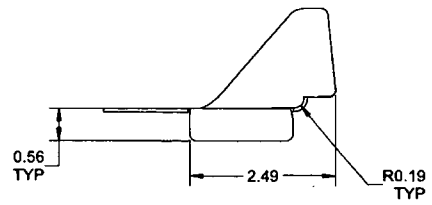

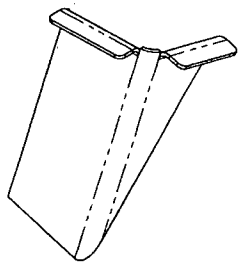

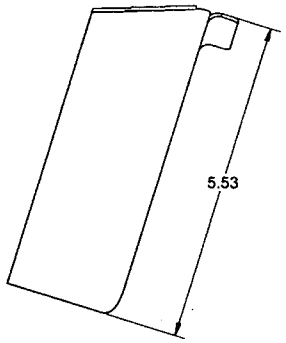

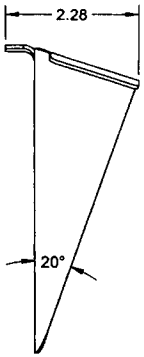

w/o 11012

RELEASED
2011-05-30

D4055-5 UPPER CUT OUT

NOTES:
1) MATERIAL: MADE FROM D4055-5F
2) FINISH: CHEMICAL CONVERSION COAT PER DART QSI 005 4.1 (B)
3) TOLERANCES: PER DART QSI 018 UNLESS OTHERWISE NOTED
4) UNITS: INCHES UNLESS OTHERWISE NOTED
5) BREAK SHARP EDGES: 0.005 TO 0.010 MAX
6) IDENTIFICATION: N/A
7) WEIGHT: 0.10 lbs

DESIGN		DART AEROSPACE LTD HAWKESBURY, ONTARIO, CANADA
DRAWN		
CHECKED		DRAWING NO. D4055 — REV. B — SHEET 8 OF 15
MFG. APPR.		
APPROVED		TITLE: TANK — SCALE: NTS
DE APPR.		
DATE	11.05.12	

COPYRIGHT © 2010 BY DART AEROSPACE LTD
THIS DOCUMENT IS PRIVATE AND CONFIDENTIAL AND IS SUPPLIED ON THE EXPRESS CONDITION THAT IT IS NOT TO BE USED FOR ANY PURPOSE OR COPIED OR COMMUNICATED TO ANY OTHER PERSON WITHOUT WRITTEN PERMISSION FROM DART AEROSPACE LTD.

Dart Aerospace Ltd

W/O:		WORK ORDER CHANGES					
DATE	STEP	PROCEDURE CHANGE	By	Date	Qty	Approval Chief Eng / Prod Mgr	Approval QC Inspector

Part No: _____ **PAR #:** _____ **Fault Category:** _____ **NCR:** Yes No **DQA:** _____ **Date:** _____

Resolution: _____ **Disposition:** _____ **QA: N/C Closed:** _____ **Date:** _____

NCR:		WORK ORDER NON-CONFORMANCE (NCR)						
DATE	STEP	Description of NC Section A	Corrective Action Section B			Verification Section C	Approval Chief Eng	Approval QC Inspector
			Initial Chief Eng	Action Description Chief Eng	Sign & Date			

NOTE: Date & initial all entries

H:\fFORMS\Quality Assurance\approved QA\NCRWO RevE

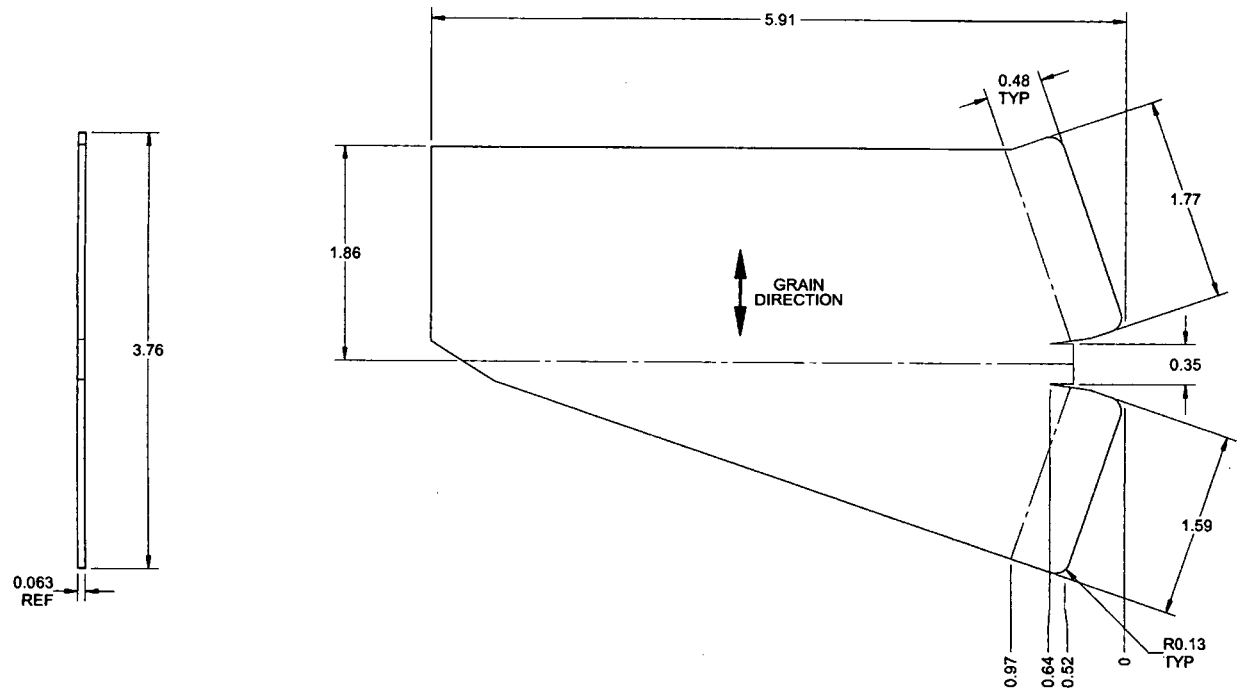

w/o 71012

RELEASED
2011-05-30

D4055-5F FLAT PATTERN

NOTES:
1) MATERIAL: 6061-T6/T62 ALUMINUM SHEET, 0.063 THICK
PER QQ-A-250/11 OR AMS-QQ-A-250/11
OR AMS 4025 OR AMS 4027 OR ASTM B209
REF DART SPEC M6061T6S.063
2) FINISH: N/A
3) TOLERANCES: PER DART QSI 018 UNLESS OTHERWISE NOTED
4) UNITS: INCHES UNLESS OTHERWISE NOTED
5) BREAK SHARP EDGES: 0.005 TO 0.010 MAX
6) IDENTIFICATION: N/A
7) WEIGHT: 0.10 lbs

DESIGN		DART AEROSPACE LTD HAWKESBURY, ONTARIO, CANADA
DRAWN		
CHECKED		DRAWING NO. D4055 — REV. B — SHEET 9 OF 15
MFG. APPR.		
APPROVED		TITLE: TANK — SCALE: NTS
DE APPR.		
DATE	11.05.12	

COPYRIGHT © 2010 BY DART AEROSPACE LTD
THIS DOCUMENT IS PRIVATE AND CONFIDENTIAL AND IS SUPPLIED ON THE EXPRESS CONDITION THAT IT IS NOT TO BE USED FOR ANY PURPOSE OR COPIED OR COMMUNICATED TO ANY OTHER PERSON WITHOUT WRITTEN PERMISSION FROM DART AEROSPACE LTD

Dart Aerospace Ltd

W/O:		WORK ORDER CHANGES					
DATE	STEP	PROCEDURE CHANGE	By	Date	Qty	Approval Chief Eng / Prod Mgr	Approval QC Inspector

Part No: _____ **PAR #:** _____ **Fault Category:** _____ **NCR:** Yes No **DQA:** _____ **Date:** _____

Resolution: _____ **Disposition:** _____ **QA: N/C Closed:** _____ **Date:** _____

NCR:		WORK ORDER NON-CONFORMANCE (NCR)						
DATE	STEP	Description of NC Section A	Corrective Action Section B			Verification Section C	Approval Chief Eng	Approval QC Inspector
			Initial Chief Eng	Action Description Chief Eng	Sign & Date			

NOTE: Date & initial all entries

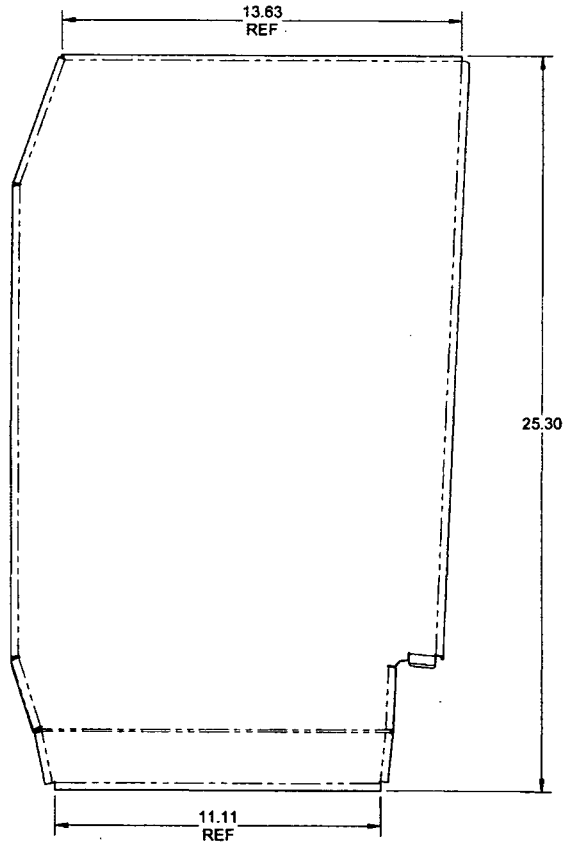

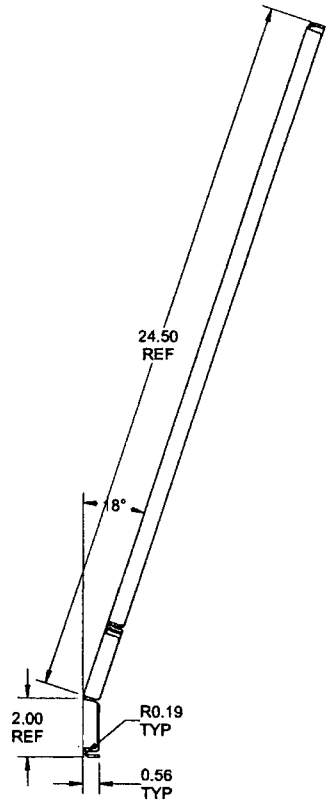

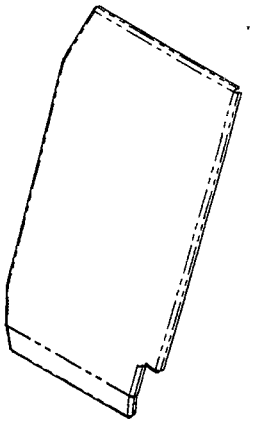

w/o 71012

RELEASED
2011 -05- 30

D4055-7 TANK FORWARD END

NOTES:
1) MATERIAL: MADE FROM D4055-7F
2) FINISH: CHEMICAL CONVERSION COAT PER DART QSI 005 4.1
3) TOLERANCES: PER DART QSI 018 UNLESS OTHERWISE NOTED
4) UNITS: INCHES UNLESS OTHERWISE NOTED
5) BREAK SHARP EDGES: 0.005 TO 0.010 MAX
6) IDENTIFICATION: N/A
7) WEIGHT: 2.56 lbs

B

DESIGN		DART AEROSPACE LTD HAWKESBURY, ONTARIO, CANADA
DRAWN		
CHECKED		DRAWING NO. D4055 — REV. B — SHEET 10 OF 15
MFG. APPR.		
APPROVED		TITLE: TANK — SCALE: NTS
DE APPR.		
DATE	11.05.12	

COPYRIGHT © 2010 BY DART AEROSPACE LTD
THIS DOCUMENT IS PRIVATE AND CONFIDENTIAL AND IS SUPPLIED ON THE EXPRESS CONDITION THAT IT IS NOT TO BE USED FOR ANY PURPOSE OR COPIED OR COMMUNICATED TO ANY OTHER PERSON WITHOUT WRITTEN PERMISSION FROM DART AEROSPACE LTD.

Dart Aerospace Ltd

W/O:		WORK ORDER CHANGES					
DATE	STEP	PROCEDURE CHANGE	By	Date	Qty	Approval Chief Eng / Prod Mgr	Approval QC Inspector

Part No: _____ **PAR #:** _____ **Fault Category:** _____ **NCR:** Yes No **DQA:** _____ **Date:** _____

Resolution: _____ **Disposition:** _____ **QA: N/C Closed:** _____ **Date:** _____

NCR:		WORK ORDER NON-CONFORMANCE (NCR)						
DATE	STEP	Description of NC Section A	Corrective Action Section B			Verification Section C	Approval Chief Eng	Approval QC Inspector
			Initial Chief Eng	Action Description Chief Eng	Sign & Date			

NOTE: Date & initial all entries

H:\fFORMS\Quality Assurance\approved QA\NCRWO RevE

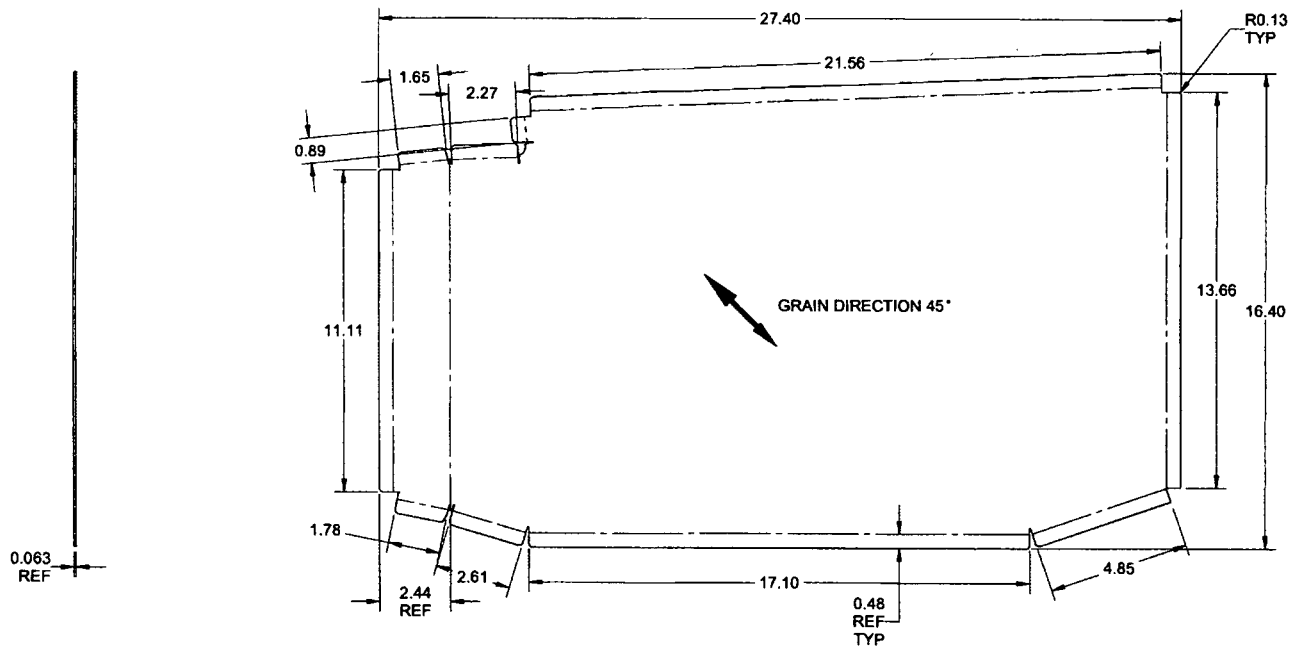

D4055-7F FLAT PATTERN

w/o 71012

RELEASED
2011-05-30

NOTES:
1) MATERIAL: 6061-T6/T62 ALUMINUM SHEET, 0.063 THICK
PER QQ-A-250/11 OR AMS-QQ-A-250/11
OR AMS 4025 OR AMS 4027 OR ASTM B209
REF DART SPEC M6061T6S.063
2) FINISH: N/A
3) TOLERANCES: PER DART QSI 018 UNLESS OTHERWISE NOTED
4) UNITS: INCHES UNLESS OTHERWISE NOTED
5) BREAK SHARP EDGES: 0.005 TO 0.010 MAX
6) IDENTIFICATION: N/A
7) WEIGHT: 2.56 lbs

DESIGN		DART AEROSPACE LTD HAWKESBURY, ONTARIO, CANADA
DRAWN		
CHECKED		DRAWING NO. D4055 — REV. B — SHEET 11 OF 15
MFG. APPR.		
APPROVED		TITLE: TANK — SCALE: NTS
DE APPR.		
DATE 11.05.12		

COPYRIGHT © 2010 BY DART AEROSPACE LTD
THIS DOCUMENT IS PRIVATE AND CONFIDENTIAL AND IS SUPPLIED ON THE EXPRESS CONDITION THAT IT IS NOT TO BE USED FOR ANY PURPOSE OR COPIED OR COMMUNICATED TO ANY OTHER PERSON WITHOUT WRITTEN PERMISSION FROM DART AEROSPACE LTD.

Dart Aerospace Ltd

W/O:		WORK ORDER CHANGES					
DATE	STEP	PROCEDURE CHANGE	By	Date	Qty	Approval Chief Eng / Prod Mgr	Approval QC Inspector

Part No: _____ **PAR #:** _____ **Fault Category:** _____ **NCR:** Yes No **DQA:** _____ **Date:** _____

Resolution: _____ **Disposition:** _____ **QA: N/C Closed:** _____ **Date:** _____

NCR:		WORK ORDER NON-CONFORMANCE (NCR)						
DATE	STEP	Description of NC Section A	Corrective Action Section B			Verification Section C	Approval Chief Eng	Approval QC Inspector
			Initial Chief Eng	Action Description Chief Eng	Sign & Date			

NOTE: Date & initial all entries

H:\fFORMS\Quality Assurance\approved QA\NCRWO RevE

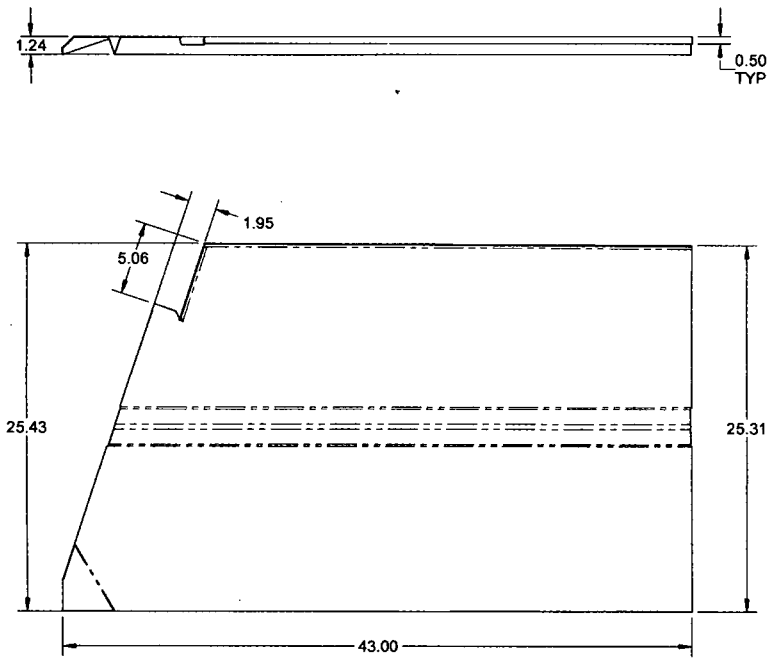

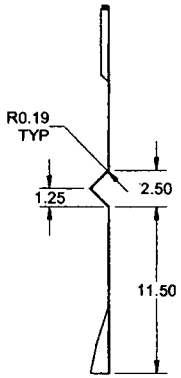

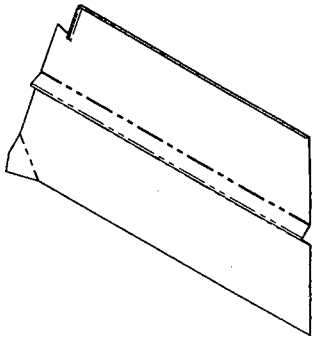

W6 71012

RELEASED
2011 -05- 30

D4055-9 TANK BACK

NOTES:
1) MATERIAL: MADE FROM D4055-9F
2) FINISH: CHEMICAL CONVERSION COAT PER DART QSI 005 4.1
3) TOLERANCES: PER DART QSI 018 UNLESS OTHERWISE NOTED
4) UNITS: INCHES UNLESS OTHERWISE NOTED
5) BREAK SHARP EDGES: 0.005 TO 0.010 MAX
6) IDENTIFICATION: N/A
7) WEIGHT: 6.41 lbs

B

DESIGN		DART AEROSPACE LTD HAWKESBURY, ONTARIO, CANADA
DRAWN		
CHECKED		DRAWING NO. D4055 — REV. B — SHEET 12 OF 15
MFG. APPR.		
APPROVED		TITLE: TANK — SCALE: NTS
DE APPR.		
DATE	11.05.12	

COPYRIGHT © 2010 BY DART AEROSPACE LTD
THIS DOCUMENT IS PRIVATE AND CONFIDENTIAL AND IS SUPPLIED ON THE EXPRESS CONDITION THAT IT IS NOT TO BE USED FOR ANY PURPOSE OR COPIED OR COMMUNICATED TO ANY OTHER PERSON WITHOUT WRITTEN PERMISSION FROM DART AEROSPACE LTD.

Dart Aerospace Ltd

W/O:		WORK ORDER CHANGES					
DATE	STEP	PROCEDURE CHANGE	By	Date	Qty	Approval Chief Eng / Prod Mgr	Approval QC Inspector

Part No: _____ **PAR #:** _____ **Fault Category:** _____ **NCR:** Yes No **DQA:** _____ **Date:** _____

Resolution: _____ **Disposition:** _____ **QA: N/C Closed:** _____ **Date:** _____

NCR:		WORK ORDER NON-CONFORMANCE (NCR)						
DATE	STEP	Description of NC Section A	Corrective Action Section B			Verification Section C	Approval Chief Eng	Approval QC Inspector
			Initial Chief Eng	Action Description Chief Eng	Sign & Date			

NOTE: Date & initial all entries

H:\fFORMS\Quality Assurance\approved QA\NCRWO RevE

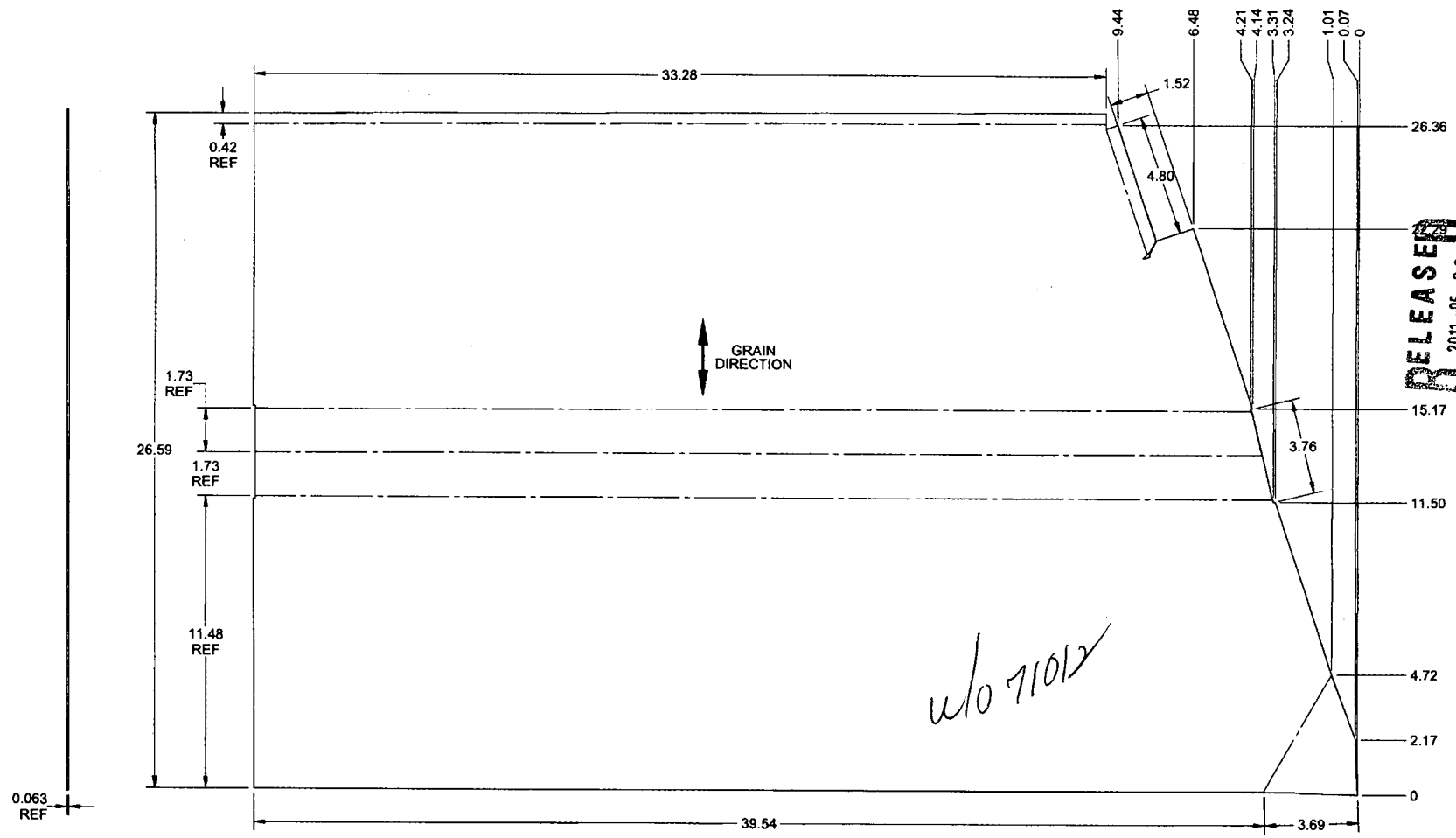

w/o 71012

RELEASED
2011-05-30

D4055-9F FLAT PATTERN

NOTES:
1) MATERIAL: 6061-T6/T62 ALUMINUM SHEET, 0.063 THICK
PER QQ-A-250/11 OR AMS-QQ-A-250/11
OR AMS 4025 OR AMS 4027 OR ASTM B209
REF DART SPEC M6061T6S.063
2) FINISH: N/A
3) TOLERANCES: PER DART QSI 018 UNLESS OTHERWISE NOTED
4) UNITS: INCHES UNLESS OTHERWISE NOTED
5) BREAK SHARP EDGES: 0.005 TO 0.010 MAX
6) IDENTIFICATION: N/A
7) WEIGHT: 6.41 lbs

DESIGN		DART AEROSPACE LTD HAWKESBURY, ONTARIO, CANADA
DRAWN		
CHECKED		DRAWING NO. D4055 — REV. B — SHEET 13 OF 15
MFG. APPR.		
APPROVED		TITLE: TANK — SCALE: NTS
DE APPR.		
DATE	11.05.12	

COPYRIGHT © 2010 BY DART AEROSPACE LTD
THIS DOCUMENT IS PRIVATE AND CONFIDENTIAL AND IS SUPPLIED ON THE EXPRESS CONDITION THAT IT IS NOT TO BE USED FOR ANY PURPOSE OR COPIED OR COMMUNICATED TO ANY OTHER PERSON WITHOUT WRITTEN PERMISSION FROM DART AEROSPACE LTD

Dart Aerospace Ltd

W/O:		WORK ORDER CHANGES					
DATE	STEP	PROCEDURE CHANGE	By	Date	Qty	Approval Chief Eng / Prod Mgr	Approval QC Inspector

Part No: _____ **PAR #:** _____ **Fault Category:** _____ **NCR:** Yes No **DQA:** _____ **Date:** _____

Resolution: _____ **Disposition:** _____ **QA: N/C Closed:** _____ **Date:** _____

NCR:		WORK ORDER NON-CONFORMANCE (NCR)						
DATE	STEP	Description of NC Section A	Corrective Action Section B			Verification Section C	Approval Chief Eng	Approval QC Inspector
			Initial Chief Eng	Action Description Chief Eng	Sign & Date			

NOTE: Date & initial all entries

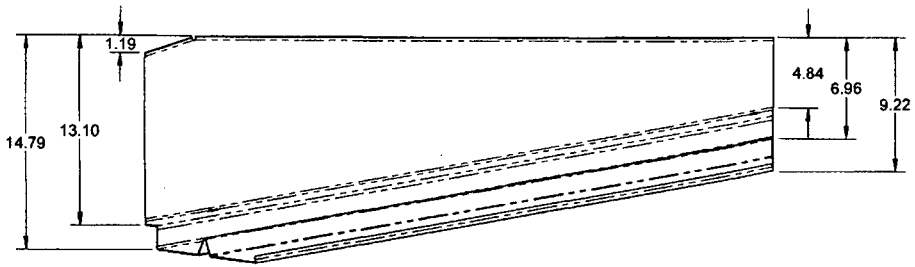

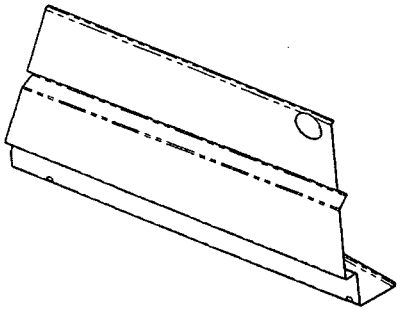

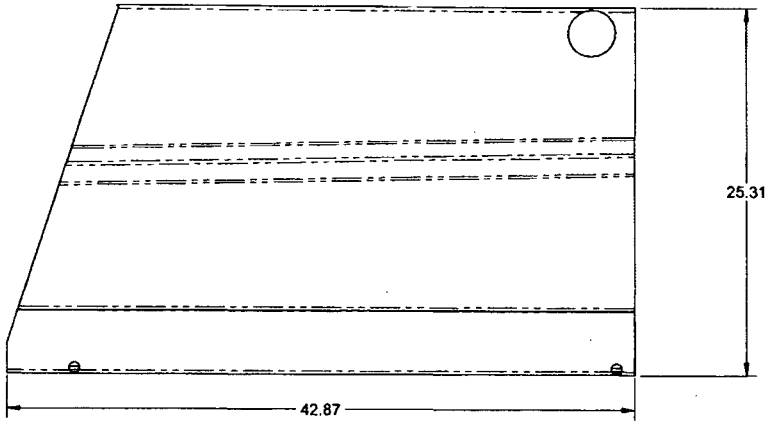

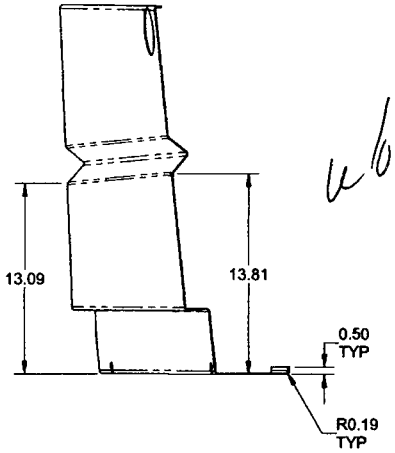

W/O 71012

RELEASED
2011 -05- 30

D4055-11 TANK FRONT AND BOTTOM

NOTES:
1) MATERIAL: MADE FROM D4055-11F
2) FINISH: CHEMICAL CONVERSION COAT PER DART QSI 005 4.1 (B)
3) TOLERANCES: PER DART QSI 018 UNLESS OTHERWISE NOTED
4) UNITS: INCHES UNLESS OTHERWISE NOTED
5) BREAK SHARP EDGES: 0.005 TO 0.010 MAX
6) IDENTIFICATION: N/A
7) WEIGHT: 9.32 lbs

DESIGN		DART AEROSPACE LTD HAWKESBURY, ONTARIO, CANADA
DRAWN		
CHECKED		DRAWING NO. D4055 — REV. B — SHEET 14 OF 15
MFG. APPR.		
APPROVED		TITLE: TANK — SCALE: NTS
DE APPR.		
DATE	11.05.12	

COPYRIGHT © 2010 BY DART AEROSPACE LTD
THIS DOCUMENT IS PRIVATE AND CONFIDENTIAL AND IS SUPPLIED ON THE EXPRESS CONDITION THAT IT IS NOT TO BE USED FOR ANY PURPOSE OR COPIED OR COMMUNICATED TO ANY OTHER PERSON WITHOUT WRITTEN PERMISSION FROM DART AEROSPACE LTD.

Dart Aerospace Ltd

W/O:		WORK ORDER CHANGES					
DATE	STEP	PROCEDURE CHANGE	By	Date	Qty	Approval Chief Eng / Prod Mgr	Approval QC Inspector

Part No: _____ **PAR #:** _____ **Fault Category:** _____ **NCR:** Yes No **DQA:** _____ **Date:** _____

Resolution: _____ **Disposition:** _____ **QA: N/C Closed:** _____ **Date:** _____

NCR:		WORK ORDER NON-CONFORMANCE (NCR)						
DATE	STEP	Description of NC Section A	Corrective Action Section B			Verification Section C	Approval Chief Eng	Approval QC Inspector
			Initial Chief Eng	Action Description Chief Eng	Sign & Date			

NOTE: Date & initial all entries

H:\fFORMS\Quality Assurance\approved QA\NCRWO RevE

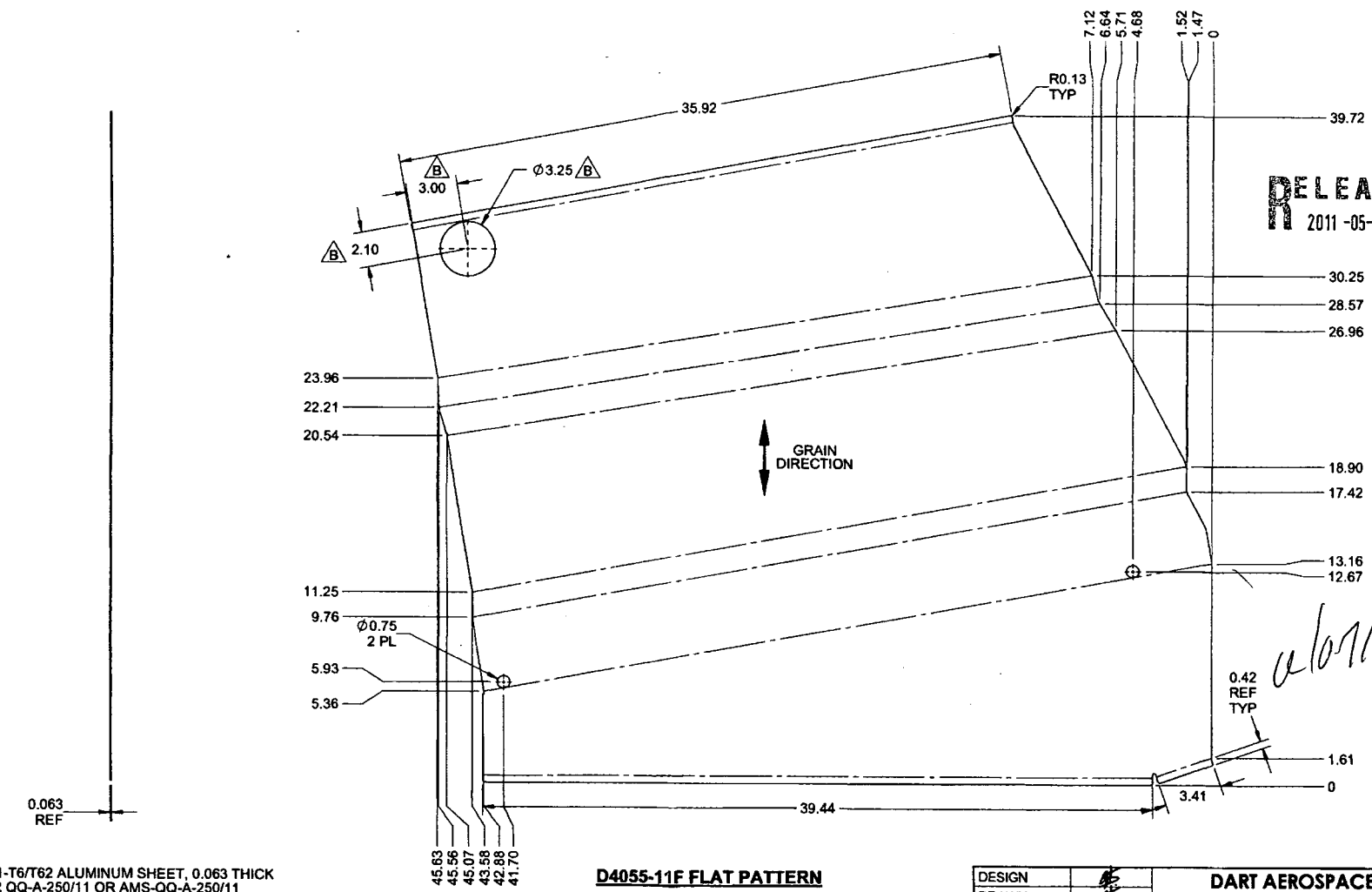

RELEASED
2011-05-30

a/07/012

D4055-11F FLAT PATTERN

NOTES:
1) MATERIAL: 6061-T6/T62 ALUMINUM SHEET, 0.063 THICK
PER QQ-A-250/11 OR AMS-QQ-A-250/11
OR AMS 4025 OR AMS 4027 OR ASTM B209
REF DART SPEC M6061T6S.063
2) FINISH: N/A
3) TOLERANCES: PER DART QSI 018 UNLESS OTHERWISE NOTED
4) UNITS: INCHES UNLESS OTHERWISE NOTED
5) BREAK SHARP EDGES: 0.005 TO 0.010 MAX
6) IDENTIFICATION: N/A
7) WEIGHT: 9.32 lbs

DESIGN		DART AEROSPACE LTD HAWKESBURY, ONTARIO, CANADA
DRAWN		
CHECKED		DRAWING NO. D4055 — REV. B — SHEET 15 OF 15
MFG. APPR.		
APPROVED		TITLE: TANK — SCALE: NTS
DE APPR.		
DATE	11.05.12	

COPYRIGHT © 2010 BY DART AEROSPACE LTD
THIS DOCUMENT IS PRIVATE AND CONFIDENTIAL AND IS SUPPLIED ON THE EXPRESS CONDITION THAT IT IS NOT TO BE USED FOR ANY PURPOSE OR COPIED OR COMMUNICATED TO ANY OTHER PERSON WITHOUT WRITTEN PERMISSION FROM DART AEROSPACE LTD

Dart Aerospace Ltd

W/O:		WORK ORDER CHANGES					
DATE	STEP	PROCEDURE CHANGE	By	Date	Qty	Approval Chief Eng / Prod Mgr	Approval QC Inspector

Part No: _____ **PAR #:** _____ **Fault Category:** _____ **NCR:** Yes No **DQA:** _____ **Date:** _____

Resolution: _____ **Disposition:** _____ **QA: N/C Closed:** _____ **Date:** _____

NCR:		WORK ORDER NON-CONFORMANCE (NCR)						
DATE	STEP	Description of NC Section A	Corrective Action Section B			Verification Section C	Approval Chief Eng	Approval QC Inspector
			Initial Chief Eng	Action Description Chief Eng	Sign & Date			

NOTE: Date & initial all entries

H:\fFORMS\Quality Assurance\approved QA\NCRWO RevE